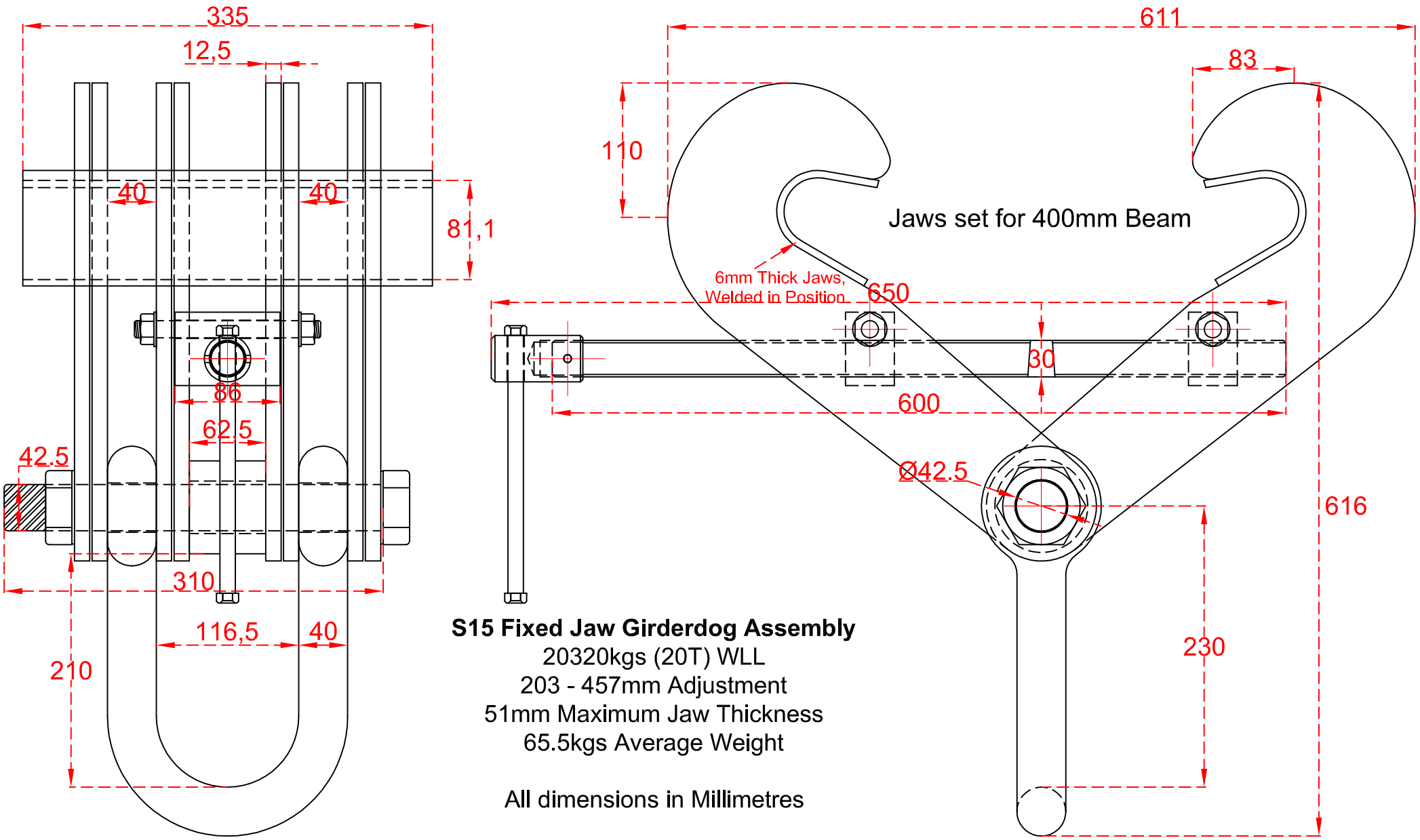

S15 Fixed Jaw Girderdog Assembly

20320kgs (20T) WLL

203 - 457mm Adjustment

51mm Maximum Jaw Thickness

65.5kgs Average Weight

All dimensions in Millimetres