P6 Assembly
3048kgs (3T) WLL
228 - 381mm Adjustment
36kgs Average Weight
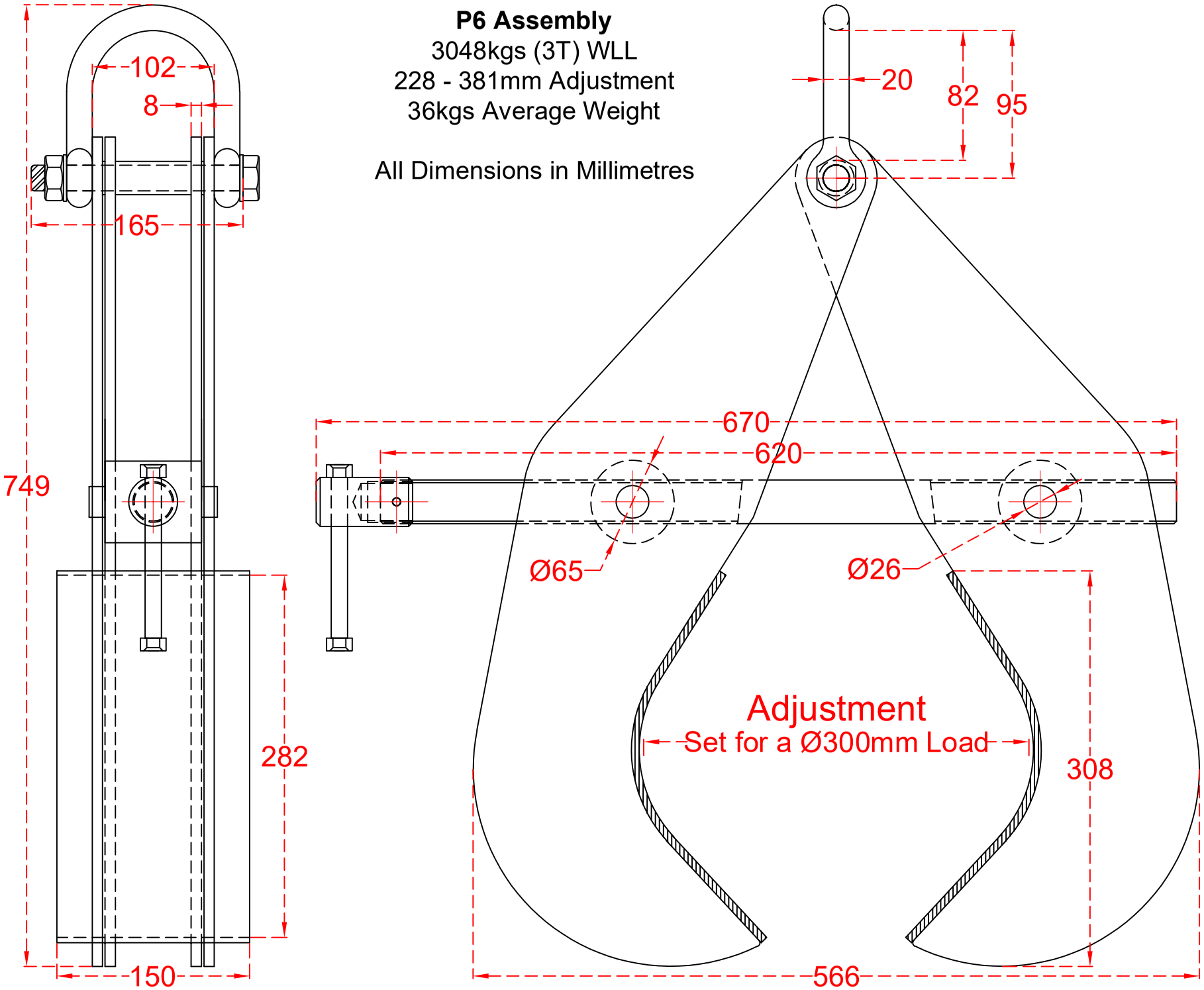
All Dimensions in Millimetres