Worldwide Suppliers
of **Super Clamps**

SUPER CLAMP

ARTICULATED Geared SUPERCLAMP Runway Beam Trolley GBT3 RT

For use on beam flange with a minimum of
one metre inside radius
WLL10160kg(10 Ton). Weight113.5kg

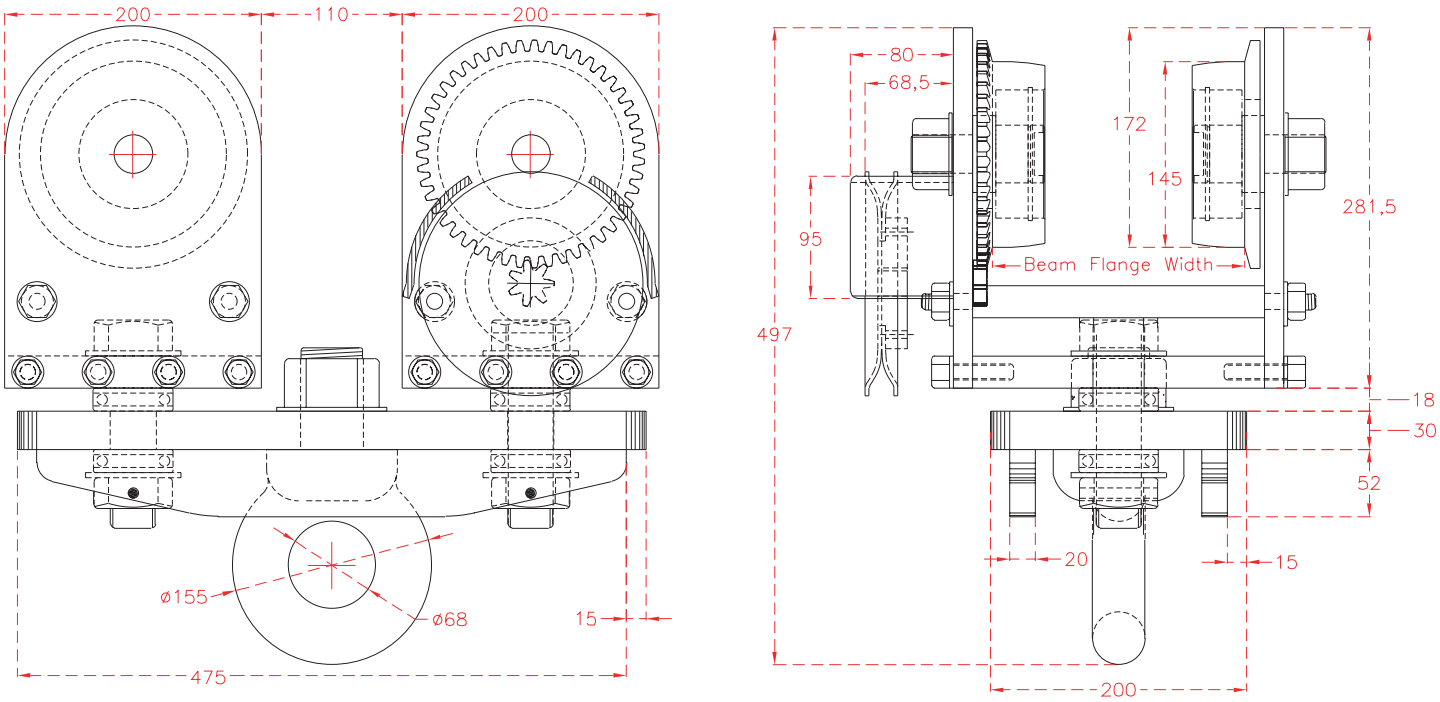

Riley (Lifting Equipment) Ltd

Hope Building, Dockray Street
Colne, Lancashire BB8 9HT

Tel: +44 (0) 1282 867 177
Fax: +44 (0) 1282 863 698

Email: info@superclamp.co.uk
www.superclamp.co.uk