Worldwide Suppliers
of **Super Clamps**

SUPER CLAMP

Adjustable Double Ended SUPERCLAMP Monorail Construction Clamp

Model	WLL	Weight	Adjust	Dimensions					
				A	B	C	D	E	G
S7A	3048kg	10.5kg	76 - 190	120	6	22	188	275	366
S8A	4064kg	20kg	150 - 254	130	10	22	327	410	457

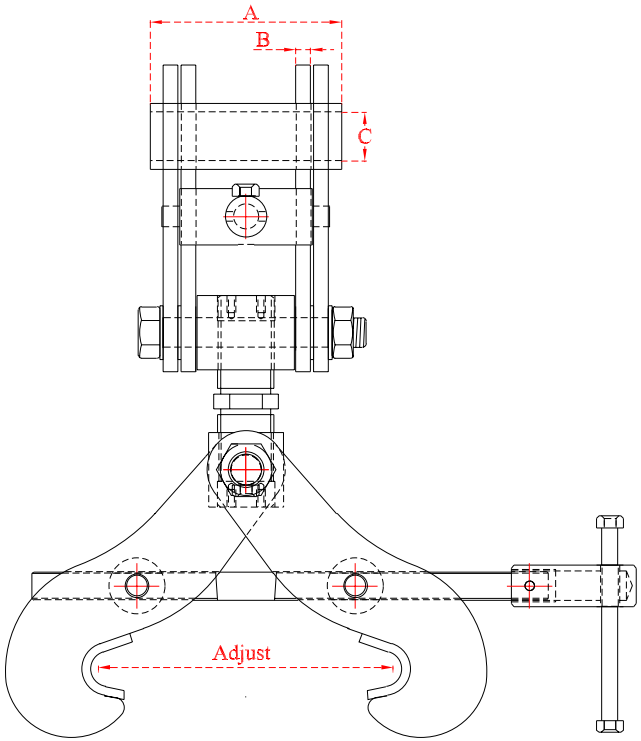

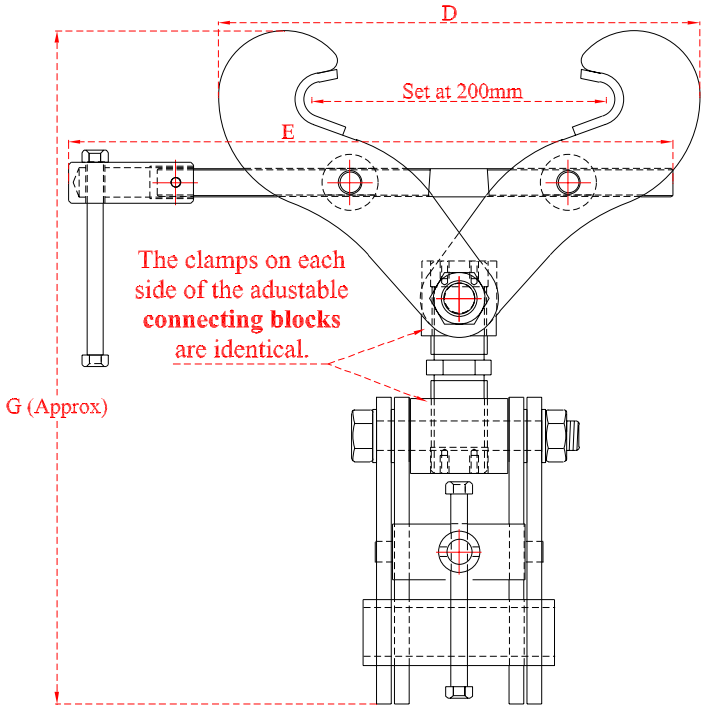

Riley (Lifting Equipment) Ltd

Hope Building, Dockray Street
Colne, Lancashire BB8 9HT

Tel: +44 (0) 1282 867 177
Fax: +44 (0) 1282 863 698

Email: info@superclamp.co.uk
www.superclamp.co.uk